INSTITUTO TECNOLÓGICO AUTÓNOMO DE MÉXICO

CENTRO DE INVESTIGACIÓN ECONÓMICA

Discussion Paper Series

On the Effects of Regulation-Induced Forex Market Segmentation in Small Open Economies

Alejandro Reynoso

Instituto Tecnológico Autónomo de México

October 2002

Discussion Paper 02-04

Av. Camino a Santa Teresa # 930
Col. Héroes de Padierna
México, D.F. 10700
M E X I C O

On the Effects of Regulation-Induced Forex Market Segmentation in Small Open Economies

A Simulation Model based on the Stylized Facts of the Mexican Experience

Alejandro Reynoso *

October, 2002 †

Abstract

The central banks of small open economies have to procure the proper operation of the payments system for transactions with the rest of the world. They do so facing the constraint of a limited stock of international reserves. To make ends meet, they usually rely on three instruments: the choice of an exchange rate regime, the regulation of the foreign exchange transactions of commercial banks and general exchange controls. Based on some stylized facts of the Mexican experience of the past three decades, this paper uses a SIMULINK® model to show the effects of different institutional constructs on some key nominal variables. For a reasonable set of simulation parameters, it shows that either the complete segmentation of the *peso-dollar* market or a full integration of both markets are preferable to intermediate arrangements that contemplate some form of partial financial liberalization.

*Instituto Tecnologico Autonomo de Mexico

†First draft. Comments welcome

Introduction

The problem

The central banks of small economies have virtually an unlimited capacity to help their own government and local banks to satisfy their short term liquidity needs in the local currency. Unfortunately, those central banks would have to rely on their stock of international reserves to extend credit in a foreign currency to distressed banking institutions or to fund the government in case of their failing to roll over debt.

From this perspective, the international reserves are not only needed to defend a fixed or administered exchange rate, but also to respond to more general shortages in foreign funding. Hence, the impact of domestic and external shocks on the exchange rate, interest rates and country risk spreads will depend on what the reserves are ultimately committed for.

To make ends meet, the authorities usually rely on three instruments: the choice of an exchange rate regime, the regulation of the foreign exchange transactions of commercial banks and general exchange controls.

It is certainly not unusual that under a fixed exchange rate regime, the central bank would try to shield its reserves from shocks specific to banks o to certain sectors in the economy, by introducing some sort of exchange controls. However, even when the exchange rate is allowed to float freely, central banks may need to hold significant levels of international reserves to be able to keep the payments system going in times of distress.

The Mexican Experience of the last three decades offers a good "one stop" example of the kind of constructs of exchange rate regimes and formulas to segment the foreign exchange market that can be seen in practice.[1]

In the $1970's$, the authorities had in place a package that combined a fixed exchange rate regime [2] with virtually no restrictions to any form of foreign exchange transactions. When the crisis of 1982 arose, the central bank found itself without reserves to face the needs of the current account, the government and the banks. Hence, Mexico devalued, defaulted on foreign lenders and on domestic deposits denominated in *dollars*.

The policy response was to fix the exchange rate after the first round of

[1] For a more detailed account of what happened over these period on the foreign exchange market front, see Aspe [2], Blanco and Garber [3], and Ortiz [16]

[2] For the purposes of this paper, a crawling peg will be thought be equivalent to a fixed exchange rate regime.

devaluations, and to impose widespread exchange controls. The transactions in the capital account were reduced only to direct foreign investment and loans granted by international financial institutions.

In the early $1990's$, as part of an economy-wide strategy of deregulation and privatization, the exchange controls on firms and the public were lifted. Banks were allowed to borrow and lend in foreign exchange, but were not allowed to take deposits from the public other than in *pesos*. In addition, banks were required to match their overall holdings of assets and liabilities in foreign exchange. During this time, the *peso* floated within a rather narrow band.

The crisis of 1994 required to use a large proportion of the reserves to defend, for some time, the exchange rate; and later to lend the banks who were unable to roll over their short term obligations. The central bank opened for almost a year a *dollar* discount window. Banks drew close to US$4.0 billion during the first six months, out of an estimated US$10 billion in interbank loans that were due in that same period.

The response to this new crisis was to let the *peso* float and to further limit the foreign exchange transactions that banks could make. In fact, banks were not only required to balance their *dollar* books, but to match their assets and liabilities in foreign exchange by maturity dates.

Period	Banks can lend in US$	Banks can borrow in US$ from foreign creditors	Public can hold US$ deposits in local banks	Generalized Capital controls	Exchange Rate Regime
1970-76	no	no	no	no	Fixed
1976-82	yes	yes	yes	no	Crawling Peg
1982-91	no	no	no	yes	Crawling Peg
1991-94	yes	yes	no	no	Target zone
1995-	yes	yes	no	no	Floating

Table 1: Institutional Arrangements in Mexico's Forex market

Six years into the operation of this package of rules, the debate on where to move forward appears to be considering two main alternatives: on the one hand, to further loosen the restrictions on banks by asking them to show a long *dollar* position, or in other words, to require banks to have a part of their capital denominated in *dollars* and earmarked to a balance sheet in

dollars. The other initiative is far more aggressive. It consists on allowing the operation of *branches* of foreign banks in the Mexican territory. They would also be given the authorization to take deposits and make loans in any currency.

The authorities may soon decide on the course of action to follow. In doing so they will be conditioned by at least the following four facts:

- Since the collapse of the banking system in the aftermath of the 1994-95 crisis, most institutions have changed hands in favor of foreign owners. Aside from the fourth largest bank, the rest of the institutions of any significant size are subsidiaries of American, Canadian or Spanish banks.

- Foreign banks operate as subsidiaries, which means that their liabilities are limited to the capital of the company incorporated in Mexico and that is the holder of the banking license.

- A recent change in the Banking Law gives the Ministry of Finance the power to discretionarily authorize the operation of *branches*, whose liabilities would be limited to the capital of the *parent* (holding) company. However, the Executive branch has yet to exercise powers.

- Mexico's *Currency Law* assigns a *legal tender* status only to the *peso*. Hence, a full integration of Mexico's payments system to that of the other country (*i.e.* equal status to both currencies) would require an amendment of such law.

Before proceeding, it shall be pointed out that the characteristics of the financial sector that underlies our discussion are rather similar across most of the Spanish speaking Latin American countries. In the specific case of Mexico, the commercial banks are only *national banks*, in the sense that are subject exclusively to Federal regulations. They are a dozen in number, and about $\frac{2}{3}$ of the industry is concentrated in the top 4 institutions. The Central Bank is autonomous and retains the power to regulate all banking transactions involving any foreign currency. However, the prudential regulation dealing with accounting practices and capital sufficiency is in the hands of the Ministry of Finance.

The literature

The relevance of the research in the area of capital controls comes from the fact that, contrary to what happened in the past, they take more subtle forms today. Notwithstanding, we believe that their impact may still be substantial.

The recent research on this topic may be limited by the fact that, in practice, the implementation of these sort of capital controls has a lot to do with the way in which banks and other financial intermediaries are regulated in their every day operations. To the extent that such rules tend to be complex and rather obscure, their presence and implications are less obvious to the eyes of the analysts. This happens in spite of the fact that aside from the Mexican case, there are some other similar and interesting examples of *forex* market segmentation in countries such as Argentina, Chile, South Korea and Colombia, documented by and Abrams and Beato [1].

In this paper, we suggest that the so called first and second generation models of exchange rate collapses could offer a good technical framework for answering policy questions dealing when deciding on how to regulate the *forex* market.

On the one hand, the early models by Salant and Henderson [18], Krugman [11] and Flood and Garber [9] capture in a simple mathematical formulation the fact that individual agents take into account their own projections on how the stock of reserves will evolve when deciding whether or not hold the local currency at the existing price. The second generation models, like the ones surveyed in Flood and Marion [10], add three elements that will be useful in understanding the defensive policy responses like the ones that we have described for the Mexican case;

- First, authorities generally pose non-linear policy responses to attacks. Although the literature focuses on fiscal and monetary reaction functions, like in Calvo [5] and Obstfeld [15], it does not rule out the non-linear regulatory caps like the ones typically present in the practice of banking regulation.

- Second, it is not unusual to find multiple equilibria solutions, due to information costs like in Morris and Slim [12], or to policy responses as suggested by Obstfeld [14]. In our case, we will find the possibility of multiple equilibria coming from the stochastic specification of the model, not very differently from the one suggested in Obstfeld [15].

- Finally, agents are not necessarily homogeneous which raises a variety of issues on how they assimilate each other's beliefs and actions, like in Calvo [4]. In our case, the general public, the commercial banks and the international financial markets represent agents who face constraints that are different for reasons ranging from their own preferences to the institutional environment where they operate.

This paper also build upon some of the notions presented by Chinn and Dooley [7], Gultekin *et.al.* [13] and Dornbusch and Reynoso [8] in the context of the financial repression literature. These papers stress the fact that it is not always true that taking steps in the direction of financial liberalization is the best course of action. In fact, a selective and discretionary liberalization of some segments of the market could end up increasing the vulnerability of this sector to real and nominal shocks.

This paper

The specific scope of this paper to show some simulation results from a model that tries captures on the one hand, the implications of not using international reserves exclusively for defending a peg; and on the other hand, the effects of various restrictions on foreign exchange transactions, like the ones used by Mexico, on some key nominal variables such as interest rates, country risk spreads and the exchange rate.

To that end, the first section explains the specification of the model. Section two parameterizes the model with values that may be reasonably found in a small open economy. Section three ranks the results in terms of some stabilization policy criteria.

Finally, the simulations are run on MATLAB-SIMULINK® in order to allow the reader to carry out her own simulations, if she decides to do so, on a widely used open platform. All the relevant code is included in the paper. In addition, a MATLAB *GUI* is available from the author on request.

1 The Model

The setting has two currencies. The local currency will be generically referred as *pesos*, and the foreign currency will be the *dollar*. The exchange rate will be expressed in terms of *dollars per peso*. All variables will be nom-

inal. The general price level at home and abroad will be assumed constant and set equal to one.

To simplify things we will consider a Krugman-Flood-Garber economy with the following exchange rate determination equation:

$$e = min(R/W, e_{target}) \tag{1}$$

where W stands for nominal wealth of the public, denominated in *pesos*; R is some definition of the stock of international reserves and is denominated in *dollars*; and e_{target} is the target exchange rate set arbitrarily by the authorities.

1.1 The agents

The model has four agents with the following constraints and behavioral characteristics:

Central Bank. We will work with a simplified balance sheet of the central bank. On the asset side, we will see the net loans in *pesos*, L_p, plus the loans in *dollars* L_d/e to commercial banks. To this amount we will add the international reserves R/e. It will be assumed that that there is a reserve requirement imposed on commercial banks equivalent to 100% of the *peso* deposits and that individuals hold *pesos* only in the form of deposits. In this economy there is no currency in circulation and therefore, B in equation (2) stands for the monetary base.

$$L_p + L_d/e + R/e \equiv B \tag{2}$$

We will assume that at any given time there is an exogenously determined supply of *dollars* available to the central bank, the commercial banks and the public. Such supply is governed by a stationary process in equation (3) which can be also seen as some sort of balance of payments equation,

$$R^s = m + sz \tag{3}$$

with $z_j \sim$ N(0,1), for all j, and $cov(z_i, z_j) = 0$ for $i \neq j$. The small s is the standard deviation of the process (3), and the subscripts (i, j) can be thought as indices for independent observations.

The supply R^s is distributed across agents according to equation (4),

$$R^s = R + D_d + L_d \tag{4}$$

where D_d are the *dollars* in the hands of the public. Implicit in this definition is the notion that all current account surpluses are transferred somehow first to the central bank, either by interventions in the *forex* market or by some fiscal channel [3]. The redistribution back to the private sector happens through direct interventions to defend the parity, via the accommodation of the demand D_p, or by the *dollar* loans made to distressed banks, L_d.

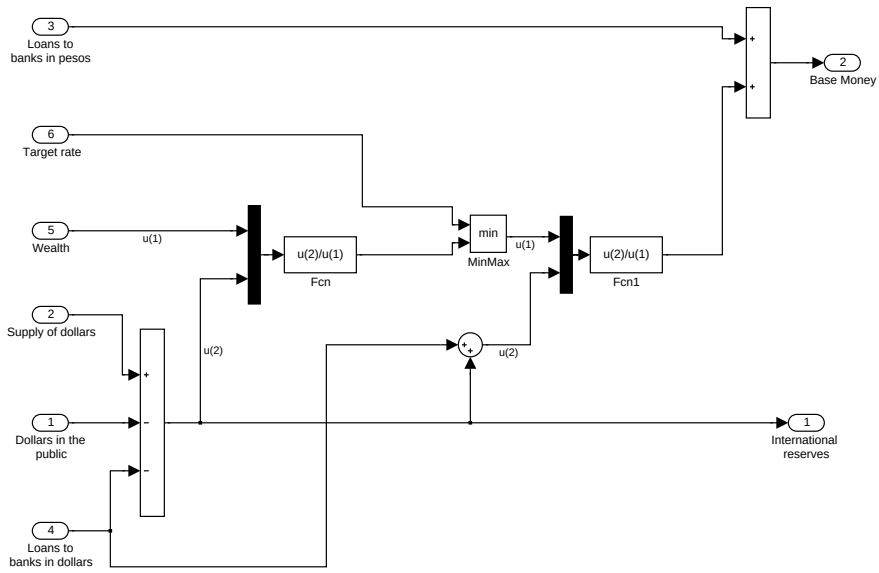

Figure 1: SIMULINK representation of the central bank subsystem

Figure 1 is the SIMULINK representation of equations (1) to (4). It only adds to what we have already said the remark that the central bank will also passively attend to the needs of the commercial banks in *pesos*.

Commercial Banks. In the most general model, we will assume that banks carry two books. One in *dollars* and another one in *pesos*. To keep

[3]This type of specification, where reserves fluctuate without an explicit intervention of the central bank in the foreign exchange market is not that far away from reality in the case of Mexico. There the central bank holds the foreign exchange accounts of the Federal Government. For instance, the national oil company, PEMEX has to surrender all its export revenues to the central bank; simultaneously the federal government is credited with those proceeds in its *peso* account with Banco de Mexico.

things simple, equation(5) implies that, with respect to their operations in *pesos*, the local banks only play the role of taking deposits and placing them in their respective accounts at the central bank. K_p is the capital in the *peso* book, denominated in *pesos*. D_p are the deposits that the public has in *pesos*, and $-L_p^c$ are the deposits that banks have in their *peso* accounts in the central bank.

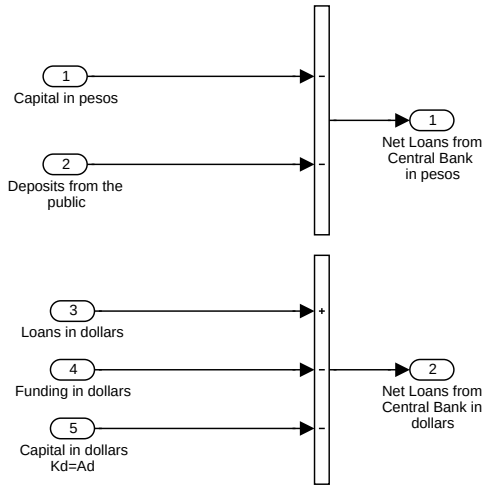

Figure 2: SIMULINK representation of the commercial banks' subsystem.

$$K_p + D_p = -L_p \tag{5}$$

$$K_d + L_d^f - P_d - A_d = -L_d \tag{6}$$

Figure 4 also displays the *dollar* book corresponding to equation (6). The variable P_d is the *dollar* denominated loan portfolio. The variable A_d represents some *dollar* denominated liquid assets held by the commercial banks as sight deposits in foreign institutions, or in their dollar accounts at the central bank. [4]

Finally, equations (7) to (9) imply that the *peso* component of the capital is modified by random and independent shocks, and that banks will keep whatever long *dollar* position they may have in the form of liquid assets A_d.

[4]See Reynoso ([17]) for a description of the *dollar* reserve requirements that Banco de Mexico imposes on local commercial banks.

$$K_p = m_p + s_p\xi \quad (7)$$
$$K_d = \overline{K}_d \quad (8)$$
$$A_d = \overline{A} \quad (9)$$

with $\xi_j \sim$ N(0,1), for all j, and $cov(\xi_i, \xi_j) = 0$ for $i \neq j$. Again, (i, j) are indices for labelling the independent observations. We will also assume that $cov(\xi_i, z_j) = 0$ for all i and j.

The Public. The setting is one of risk neutral individuals who make portfolio allocation decisions on a given wealth, W (constant in *peso* terms), as shown in equation (10). D_d stands for the amount of *dollars* that people hold outside the banking system and D_p for the deposits in *pesos* in the local banking sector

$$D_p^g + D_d/e = W \quad (10)$$

In deciding whether to hold *pesos* or *dollars*, these agents have to determine an expected rate of depreciation of the exchange rate, $E(\gamma|R\_1^*)$, and then compare it with a measure of their opportunity cost. R^* will be some measure of the international reserves as defined by equation (21), below.

To explain how we think that this process takes place, lets look first at the expectation formation mechanism, and then we will come back to the discussion on what the relevant opportunity cost should be.

The starting point is the calculation of the expected value of the two sides of equation (1). Equations (11) to (14) do so by using the fact that shocks to reserves are normally, independently and identically distributed. They also highlight some characteristics of the model that are worth looking at in some detail:

$$f(\rho|R^*_{-1}) = \frac{\rho}{W}\frac{1}{\kappa s\sqrt{2\pi}} \exp -\frac{(\rho - R^*_{-1})^2}{2\kappa^2 s^2} \quad (11)$$
$$h(\rho|R^*_{-1}) = e_{target}\frac{1}{\kappa s\sqrt{2\pi}} \exp -\frac{(\rho - R^*_{-1})^2}{2\kappa^2 s^2} \quad (12)$$
$$E(e|R^*_{-1}) = \int_{-\infty}^{W\, e_{target}} f(\rho|R^*_{-1})d\rho + \int_{W\, e_{target}}^{\infty} h(\rho|R^*_{-1})d\rho \quad (13)$$
$$E(\gamma|R^*_{-1}) = ((E(e|R^*_{-1}) - e_{target})/e_{target}) \quad (14)$$

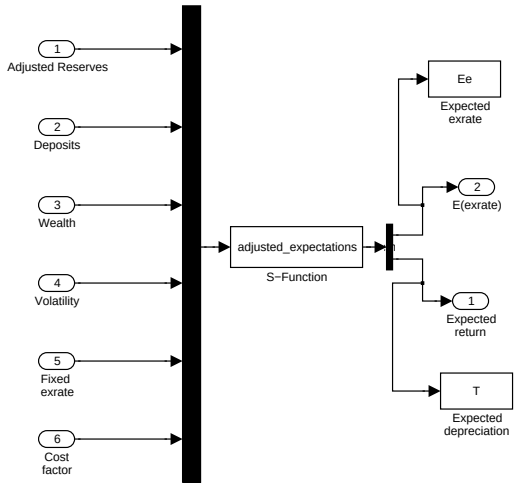

Figure 3: SIMULINK representation for the expectation formation module

- The model is constructed having in mind a solution where people hold *peso* deposits as default. Later on we will explain how the parameters of the model can be set to have the situation where the economy is *dollarized*.

- The variable R^*, or *adjusted reserves*, is the level of reserves that people think that the central bank will hold once the foreign banks have made their decision on how much they will lend to domestic banks. It follows from equations (2) and (4), that the level of reserves could go down if banks see their foreign funding stopped. We will develop an expression for R^* further down.

- We introduce the parameter κ here, and in the opportunity cost section of the model. Its purpose is to capture the possibility *hysterisis* or *irreversibility* of capital flight. The situation in mind is that since individuals do not have the possibility to establish *dollar* denominated deposits at home, they can either buy *dollars* and place them *'under the mattress'*, or take them abroad. In practice, the latter is often an irreversible phenomenon with some clandestine overtones, often for tax reasons. Namely, if individuals decide to bring back their *flown* capital, they are supposed to declare and pay taxes on the accrued and realized interest and exchange gains. Frequently this is a substantial transaction cost which only makes possible the repatriation either, when there is

the perspective of a large exchange rate appreciation and/or when the government declares a tax amnesty.

We decided to model this problem as one of a *mandatory stay*, that is, if the public takes money out of the domestic system, they would have to keep such *dollars* abroad for $\sqrt{(kappa)}$ periods. For that reason, the relevant exchange rate forecast is not the one step-ahead, but the κ step ahead projection. Finally, since we have assumed a stationary, normal and separable shock process for the supply of dollars adjustment on the conditional expectation formula amounts to simply scaling up κ times the standard deviation s.

Figure (3) is the SIMULINK representation of what was said above. It is important to mention that the block named *"S-Function: adjusted expectations"* calls back the MATLAB subroutine in the appendix B which replicates equations (11) to (14).

Once individuals have made the calculations of the return in *dollars* of holding *pesos* implicit in equation (14), we assume that they compare it with the interest rate on *peso* denominated assets.

$$D_p = \begin{cases} W & \text{if } [(1+i)^{\kappa}] + E(\gamma|R^*_{-1}) - 1 \geq 0 \\ 0 & \text{otherwise} \end{cases} \tag{15}$$

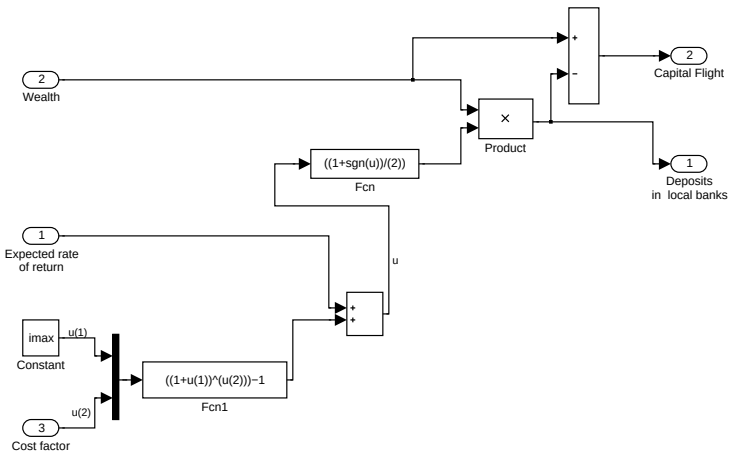

Figure 4: SIMULINK representation of the subsystem for the general public

Foreign lenders Foreign banks play the role of funding the *dollar* lending portfolio of local banks. The basic assumption is that foreign banks will lend as long as they think that local banks are solvent. Lets define K^* in equation (17) as the level of capital below which the foreign banks consider that they would not be able to collect their principal and interest. We can also define the default probability Π in equation (19) which will depend on the *dollar* value of the total capital ($e\,K_p$ and K_d) of the local banks.

$$\hat{e} \equiv E(e|R^*_{-1}) \tag{16}$$

$$K^*(\hat{e}, K_d) = (1+i^f)\frac{L^f_d}{\hat{e}} - \frac{K^c_d}{\hat{e}} \tag{17}$$

$$p(\lambda, K_p) = \frac{1}{s_p\sqrt{2\pi}} \exp -\frac{(\lambda - K_p)^2}{2s_p^2} \tag{18}$$

$$\Pi(\hat{e}, K_d, K_p) = \int_{-\infty}^{K^*(\hat{e})} p(\lambda)d\lambda \tag{19}$$

Finally, the decision of how much to lend is given by equation (20) where the foreign banks adjust their rate of return i^f, by the chances of not been paid Π, either because the capital dries up for reasons like bad loans, or because its value drops significantly due to a devaluation.

$$L^f_d = \begin{cases} P_d & \text{if } i^f - \Pi(\hat{e}, K_d, K_p) \geq 0 \\ 0 & \text{otherwise} \end{cases} \tag{20}$$

Equation(20) also allows us to write down the following definition for R^*:

$$R^* = R^s - Pd + L^f_d \tag{21}$$

Figure (5) is the SIMULINK representation equations (16) to (21). The block named *"S-Function: default_probability"* calls back the MATLAB subroutine in the appendix C which replicates the subset of equations (16) to (19).

Putting the subsystems together The SIMULINK implementation of the complete model is done by simply interconnecting the subsystems in figures from 1 to 5. This is shown in figure 6, where each one of the subsystems is masked.

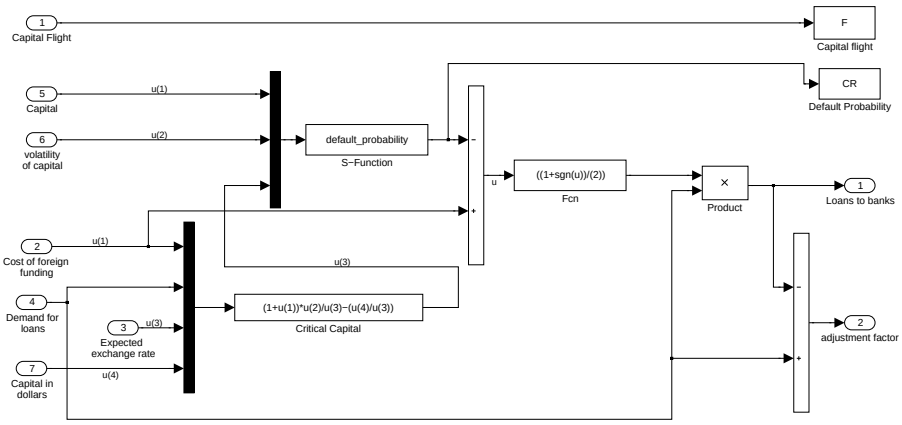

Figure 5: SIMULINK representation of the subsystem for the foreign banks

The *parameter_editor* block lists all the exogenous variables, but one. The remaining one is the domestic interest rate i, which will be set in the way described in section 1.2. Finally, the rectangular output blocks correspond to the endogenous variables whose performance will be followed to rank the various institutional arrangements in section 2 .

1.2 Parameterizing the degree of currency substitution

Is there any difference between *dollarization* and *no-dollarization*? Instead of splitting the scenarios by means of comparing regime with a fixed *versus* a flexible exchange rate; we have decided to look at the dichotomy between a *dollarized* economy, and another one where people hold *peso* deposits $D_p > 0$, both with the same target exchange rate.

Our model implies that, inside some interval, interest rates could move to exactly compensate the expected rate of depreciation, conditional on the current exchange rate being equal to some target value e_{target}. In practice, this exchange rate could be thought as a level consistent with some inflation objectives. In the absence of interventions in the *forex* market, it is perfectly possible to see a rather stable exchange rate accompanied by relatively volatile interest rates. [5].

As long as the authorities (and/or the economy as a whole) can sustain in-

[5]This seems to have been the case for the Mexican Economy since 1995

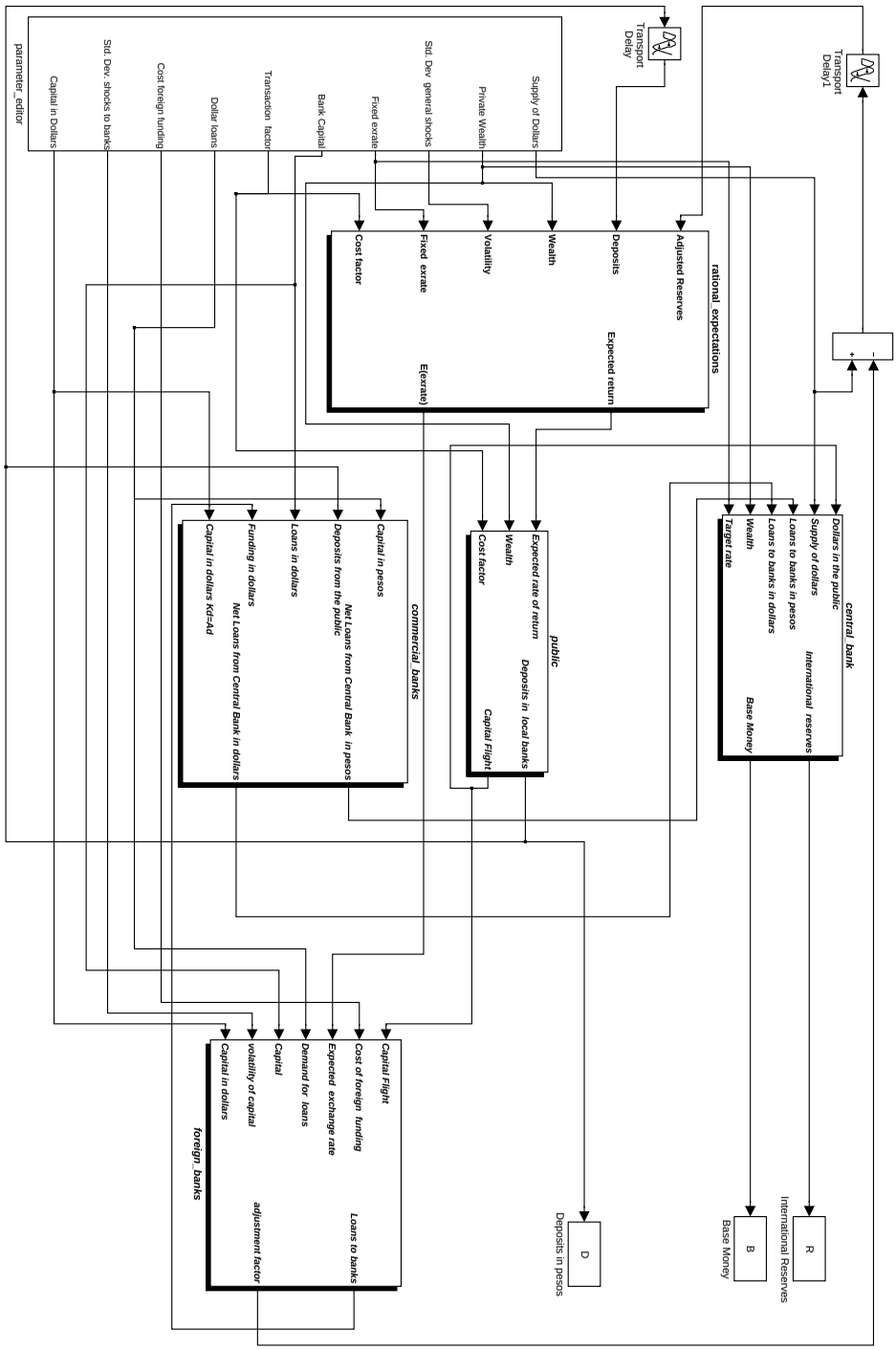

Figure 6: SIMULINK representation of the model

terest rates at levels below some stress rate i^{max}, given the level of reserves R and nominal wealth W, everybody will have their wealth in *pesos*. However, given the specification of this model, the expected exchange rate is always below the e_{target} level. Therefore, if interest rates are low enough, everybody will run into *dollars* even if an actual devaluation is a rare phenomenon.

Lets see why this is true by looking at the domestic interest rate. In a regime where people keep their *peso* deposits, the authorities are supposed to have a feasible i^{max} consistent with a sustainable e_{target}. Most of the time, however, the market rate will be lower , as shown by equation (22)

$$(i + i^{max}) \geq (1 + i) \geq \sqrt[\kappa]{1 - E(\gamma|R^{nd}_{-1})} \tag{22}$$

where R^{nd}_{-1} stands for R^{*}_{-1} in the case of *no dollarization.*

In the *dollarized* economy that is, where $D_p = 0$ or $D_d = eW$, the i^{max} rate can be set to arbitrarily low levels. The observed interest rates will now be defined by equation (23).

$$(1 + i) \geq \sqrt[\kappa]{1 - E(\gamma|R^{d}_{-1})} \tag{23}$$

Since D_d does not enter in the definition of R^* in equation (21), it has to be the case that $R^d = R^{nd}$, which means that the interest rate in both cases can take the same values.

How i^{max} is determined The simulations in section 2 will be done for the *no dollarization* case. This will allow us to gather some additional information on the implications of the alternative i^{max} distinguish two the c In the other case, it will be endogenously determined by the *Value at risk (VAR)* criterion in equation (24)

$$Pr(\sqrt[\kappa]{1 - E(\gamma|R^{*}_{-1})} \geq i^{max}) \leq \alpha \tag{24}$$

1.3 Parameterizing the regulatory regime

Based on the Mexican experience as described in table 1, we will simulate five regulatory cases.

Case 1. Segmented banking activities but not general capital controls. This will be the situation where :

- Commercial banks are not allowed to carry out any transaction in *dollars*. Therefore, they only have a *peso* book and the corresponding capital in *pesos*: $K_d = L_d^f = P_d = 0$.
- Individuals can freely convert their *pesos* into *dollars* and take them in and out of the country at no penalty: $\kappa = 1$.

Case 2. Segmented banking and general capital controls.

- Commercial banks are not allowed to carry out any transaction in *dollars*. Therefore, they only have the *peso* book and capital in *pesos*: $K_d = L_d^f = P_d = 0$.
- Individuals see their capital flight as an *irreversible* phenomenon for the reasons delineated in section 1.1. Thus, it is assumed that the individual agents can get their *dollars* and take them out of the country but, by doing so, they would be trespassing some administrative and/or tax rules: $\kappa > 1$.

Case 3. Banks can lend in *dollars* and borrow abroad but they have to have matched positions. There are not capital controls.

- Commercial banks can have a lending portfolio in *dollars*, $P_d > 0$, but face two restrictions. On the one hand, their liabilities in *dollars* have to be matched by assets in the same amount, $K_d = 0$; and they are not allowed to take *dollar* deposits to fund the *dollar* lending portfolio, $P_d = L_d^f$.
- Since we do not assume capital controls, $\kappa = 1$.

Case 4. Banks can have long positions in *dollars*. There are not capital controls.

- Commercial banks are not allowed to take deposits in *dollars*, but they can have long *dollar* positions. In other words, they are allowed (required) to have a *dollar* book with its own capital, additional to the general capital requirements. The assumption will be that

such long *dollar* component will be held in the form of liquid assets: $A = K_d = \overline{K}_d > 0$.

- The *dollar* loan portfolio is funded with resources coming from overseas loans, $P_d = L_d^f$.
- In this case $\kappa = 1$, since no general capital controls are assumed.

Case 5. Full integration: local banks are branches of foreign banks Because we are assuming a small economy, replacing the local banks with branches of *large* foreign banks, is equivalent to assuming arbitrarily large values for K_d/P_d. In this sense, case 5 is a limiting example of case 4.

Furthermore, given the structure of the model in section 1, the simulation outcomes for variables such as the exchange rate, the domestic interest rates and the country risk premium must be the same as those in case 1. The reason is that by having the *foreign parent banks* to take care of the funding of the *dollar* denominated operations, the central bank is insulated from any contingency deriving from the sudden erosion of the commercial banks capital or from abrupt funding stoppages.

Of course there will be variables that will behave differently in cases 1 and 5, such as the loan portfolio in *dollars* and the dynamics of the net position of the commercial banks *vis à vis* the central bank.

Therefore, since case 5 would be redundant with others, it is not explicitly simulated in section 2. Notwithstanding, the reader should be able to see the implications of this construct through the inspection of the simulation results for cases 1 and 4.

2 Simulations

2.1 Simulation parameters

Since the simulations are carried out assuming *no dollarization*,i^{max} is obtained endogenously.

The model of figure 1 is simulated 50 times for different values of i^{max}, starting from those given in table 2 in column i_0^{max}. In each simulation round values of i^{max} are increased in steps of 0.05 until one is able to obtain a sample where the exchange rate is equal to the target e_{target} in all but two

observations; that is, 96% of the time. This corresponds to a value for the parameter $\alpha = 0.04$.

Case	m	s^2	e_{target}	W	κ	P_d	i^f	m_p	s_p^2	K_d	i_0^{max}
1	11.00	1.00	1.00	10.00	1.00	0.00	0.10	1.00	0.30	0.00	0.10
2	11.00	1.00	1.00	10.00	2.00	0.00	0.10	1.00	0.30	0.00	0.00
3.a	11.00	1.00	1.00	10.00	1.00	3.00	0.10	2.00	0.30	0.00	0.35
3.b	11.00	1.00	1.00	10.00	1.00	3.00	0.10	4.00	0.30	0.00	0.30
3.c	11.00	1.00	1.00	10.00	1.00	3.00	0.10	5.00	0.30	0.00	0.05
4.a	11.00	1.00	1.00	10.00	1.00	3.00	0.10	1.00	0.30	1.00	0.30
4.b	11.00	1.00	1.00	10.00	1.00	3.00	0.10	1.00	0.30	3.00	0.30
4.c	11.00	1.00	1.00	10.00	1.00	3.00	0.10	1.00	0.30	4.00	0.05

Table 2: Simulation Parameters

The parameters of 2 imply an economy where the level of available reserves is larger than $e_{target}W$ but smaller than $e_{target}W + P_d$. This implies that for a devaluation to actually take place it would be necessary to have both, the foreign banks and the public running against the central bank, and values of i^{max} beyond what is sustainable.

The scenarios of table 2 aim at capturing three aspects of the problem:

- The impact *per se* of various regulatory constructs.
- The performance of such regulatory settings under different degrees of volatility in the balance of payment shocks. To that end, the variable s is let to go from 1 to 3.
- The extent to which the response of the economy to external shocks varies when the banking sector is more or less capitalized. To see that, we are assuming a banking sector whose capital runs from $frac110$ to $frac12$ of the economy. The *dollar* portfolio, for the cases where it is non-zero, amounts to 30% of the *peso* liabilities of the banking system, whereas the volatility of capital in the banking sector is set to 0.3 in all scenarios.

Finally, as for the MATLAB and SIMULINK simulation parameters, the solver options are set to *fixed-step* for the *ODE5 Dormand Price* algorithm.

2.2 How the output is organized

The tables in the appendices summarize the outcome of $1,200$ simulations, resulting from 50 simulations per round times (4 regulatory scenarios + 4 additional scenarios for different values of K_d and m_p) , times 3 scenarios corresponding to different values of s. The tables in the appendix A and report the mean and variances of each round of 500 simulations.

2.3 The results

- Generalized capital controls (Case 2) and a requirement of large long *dollar* positions imposed on banks (case $4.c$), display the best performance with respect to i^{max}, the level of expected exchange rate $\hat{e}$ and the volatility of the expected exchange rate, $\widehat{var}(\hat{e})$ for all values of s(Tables 3, 4 and 5).

- When the volatility of the balance of payments shocks is low; $s = 1$, cases 1 (market segmentation without controls); 2 (generalized controls); $3.c$ (banks well capitalized in *pesos*) and $4.c$ (banks well capitalized in *dollars*) do equally well. However, when such volatility increases, the most effective shield is given by capital controls, if we look at i^{max} as benchmark. If we also look for high values of $\hat{e}$ and low numbers for $\widehat{var}(\hat{e})$, case $4.c$ remains a very strong option.

- With respect to $\hat{e}$, tables 4 and 5 show that case $3.c$ under-performs cases $1, 2$ and $4.c$ when the volatility of the balance of payments, s, increases. The reader shall read tables 4 and 5 knowing that the expected exchange rate for case 2 reflects the κ-step ahead forecast. Therefore, when the adjustment is made to make it comparable to the rest of the scenarios, case 2 fares very well.

- If banks are moderately capitalized (cases $3.b$ and $4.b$), they do as bad as when they are poorly capitalized (cases $3.a.$ and $3.b$). This suggests that there may be a discontinuity that, unless properly addressed, makes the scenario of financial repression superior to the more deregulated ones.

- The numbers in table 6 correspond to what would be the lower bound for the domestic interest rate, i_{min}, once the sign is changed. The results once again confirm what the lowest rates are achieved in cases where

segmentation is more extreme or where the liberalization of banking transactions is accompanied by their adequate capitalization.

- Table 12 suggest that foreign banks may be make a more sharp distinction across well capitalized banks depending on whether they are capitalized in *pesos* or *dollars*, due to differences in probability, Π. For low values of s, scenarios 3.c and 4.c do not display significant differences. However, this is not longer the result for larger values of s.

- Cases 3.a to 3.c may have an impact on our definition of Base Money. When banks capitalize in *pesos* in our money, and they deposit them in the central bank, they are actually performing the role of picking up liquidity from the markets, which has a contractionary bias. This contrasts with what happens when banks capitalize in *dollars*, because such *dollars* go to the reserves achieving the corresponding sterilization effect. There are obviously ways in which the central bank could compensate the impacts of the former case, however it will end up having a net debtor position with the commercial banks, which has proven to have, in practice, consequences in the way monetary policy is carried out. [6]

Conclusions

The banking sector plays a very important role in the transmission mechanism of shocks that affect the exchange rate and interest rates in a small open economy.

When banks are weak, their own specific shocks are added to the balance of payments shocks, unless there is some degree of negative correlation between them. This means that financial liberalization, when banks lack enough capital to cushion their own risk, may add to the vulnerability of the economy as a whole.

This paper shows that the segmentation of the foreign exchange market may be a good policy response when, either the banks or the central bank do not have enough resources to withstand unforseen shocks. However, it also suggests that if such resources are available, there is no reason to keep such market segmented.

[6] See Carstens and Gil Diaz [6] for an explanation on how this happened in the Mexican case

Further understanding of this topic will benefit from the analysis of the recent evidence on the relationship between exchange controls and bank solvency and macroeconomic performance of small economies, specially in times of significant uncertainty.

References

[1] Richard Abrams and Paulina Beato, *The prudential regulation and management of foreign exchange risk*, IMF Working Paper **98 #37** (March, 1998).

[2] Pedro Aspe, *Economic transformation: the Mexican way*, MIT Press, Cambridge, MA, 1990.

[3] Herminio Blanco and Peter Garber, *Recurrent devaluation and speculative attacks on the Mexican Peso*, Journal of Political Economy **94** (1986), no. 1, 148–166.

[4] Guillermo Calvo, *Rational herd behavior and the globalization of the securities market*, Unpublished manuscript, University of Maryland.

[5] ———, *Servicing the public debt: The role of expectations*, American Economic Review 78 **78** (1988), 1411–28.

[6] Agustin Carstens and Francisco Gil Diaz, *One year of solitude: some pilgrim tales about Mexico's 1995-1995 crisis*, American Economic Review **86** (1996), no. 2, 164–169, Papers and Proceedigns of the 108 Annual Meeting of the AEA.

[7] Menzie Chinn and Michael Dooley, *Financial repression and capital mobility: Why capital flows and covered interest rate differentials fail to measure capital market integration*, Monetary and Economic Studies (December, 1997), 81–103.

[8] R. Dornbush and A. Reynoso, *Financial factors in economic development*, The American Economic Review. (May, 1989), 204–209, Papers and Proceedigns of the 101 Annual Meeting of the AEA.

[9] Robert Flood and Peter Garber, *Gold monetization and gold discipline*, Journal of Political Economy **92 # 1** (1984), 90–107.

[10] Tobert Flood and Nancy Marion, *Perspectives on the recent currency crisis literature*, IMF Working Paper **98 # 130** (September, 1988).

[11] Paul Krugman, *A model of balance of payments crises*, Journal of Money, Credit and Banking **11** (1979), 311–325.

[12] Stephen Morris and Hyung Song Shin, *Informational ecents that trigger currency attacks*, Federal Reserve Bank of Philadelphia **95 # 24** (1995).

[13] Bulent Gultekin Mustafa Gultekin and Alessandro Penati, *Capital controls and international capital market segmentation: The evidence fron the japanese and american stock exchanges*, Journal of finance **444 #4** (September, 1989), 849–869.

[14] Maurice Obstfeld, *The logic of currency crises*, Cahiers Economiques er Monetaries, Bank of France **43** (1994), 174–185.

[15] ———, *Balance of payments crises and devaluation*, Journal of Money, Credit and Banking **16** (May, 1984), 208–217.

[16] Guillermo Ortiz, *Currency substitution in Mexico: The dolllarization problem*, Journal of Money, Credit and Banking **15 # 2** (May, 1983), 174–185.

[17] Alejandro Reynoso, *Using signal processing tools for regulation analysis and implementation: The case of the reserve requirement rules for the foreign exchange transactions in Mexico*, mimeo, NBER (2001).

[18] Stephen Salant and Dale Henderson, *Market anticipation of government policy and the price of gold*, Journal of Political Economy **86** (1978), 627–648.

A Simulation results for the no-dollarization scenario

Case	$s = 1$	$s = 2$	$s = 3$
1	0.1500	0.2500	0.4000
2	0.1000	0.1500	0.2500
3.a	0.4000	0.5000	0.6500
3.b	0.3500	0.5000	0.6500
3.c	0.1000	0.3000	0.6000
4.a	0.3500	0.5000	0.6500
4.b	0.3500	0.5000	0.6500
4.c	0.1000	0.2500	0.4000

Table 3: Stress interest rate levels: i^{max}

Case	$s = 1$	$s = 2$	$s = 3$
1	0.9812	0.9345	0.8836
2	0.9537	0.8713	0.7860
3.a	0.8017	0.7708	0.7265
3.b	0.8630	0.8066	0.7533
3.c	0.9812	0.9303	0.8573
4.a	0.8017	0.7708	0.7265
4.b	0.9373	0.8904	0.8372
4.c	0.9783	0.9322	0.8815

Table 4: Expected exchange rate: $\hat{e} = E(e|R^*_{-1})$

Case	$s = 1$	$s = 2$	$s = 3$
1	0.0010	0.0073	0.0198
2	0.0013	0.0076	0.0194
3.a	0.0089	0.0247	0.0460
3.b	0.0172	0.0322	0.0538
3.c	0.0010	0.0082	0.0260
4.a	0.0089	0.0247	0.0460
4.b	0.0162	0.0318	0.0529
4.c	0.0013	0.0074	0.0197

Table 5: Variance of the simulated expected exchange rate: $\widehat{var}(\hat{e})$

Case	$s = 1$	$s = 2$	$s = 3$
1	-0.0188	-0.0655	-0.1164
2	-0.0463	-0.1287	-0.2140
3.a	-0.1983	-0.2292	-0.2735
3.b	-0.1370	-0.1934	-0.2467
3.c	-0.0188	-0.0697	-0.1427
4.a	-0.1983	-0.2292	-0.2735
4.b	-0.0627	-0.1096	-0.1628
4.c	-0.0217	-0.0678	-0.1185

Table 6: Expected rate of depreciation $\hat{r} = E(\gamma | R^*_{-1})$

Case	$s = 1$	$s = 2$	$s = 3$
1	0.0010	0.0073	0.0198
2	0.0013	0.0076	0.0194
3.a	0.0089	0.0247	0.0460
3.b	0.0172	0.0322	0.0538
3.c	0.0010	0.0082	0.0260
4.a	0.0089	0.0247	0.0460
4.b	0.0162	0.0318	0.0529
4.c	0.0013	0.0074	0.0197

Table 7: Sample variance of the rate of depreciation: $\widehat{var}(\hat{r})$

Case	$s = 1$	$s = 2$	$s = 3$
1	10.9943	10.5804	10.5746
2	10.9943	10.5804	10.5746
3.a	7.5861	7.5804	7.5746
3.b	8.7494	8.4987	8.3093
3.c	10.5861	10.4579	10.0236
4.a	8.5861	8.5804	8.5746
4.b	13.0351	13.0293	12.9624
4.c	14.3820	14.5804	14.5746

Table 8: Average Level of International Reserves: $R + A_d$

Case	$s = 1$	$s = 2$	$s = 3$
1	0.9269	8.8380	14.0394
2	0.9269	8.8380	14.0394
3.a	5.4904	8.8380	14.0394
3.b	9.6071	13.9016	19.0676
3.c	5.4904	11.9358	17.7170
4.a	5.4904	8.8380	14.0394
4.b	10.4401	15.3190	21.9727
4.c	7.3275	8.8380	14.0394

Table 9: Sample variance of International Reserves: $\widehat{var}(R + A_d)$

Case	$s = 1$	$s = 2$	$s = 3$
1	0.0843	0.7737	1.1206
2	0.0843	0.7737	1.1206
3.a	1.5862	2.0471	3.8085
3.b	-1.2665	-0.3876	1.5350
3.c	-3.5224	-3.6126	-2.8233
4.a	1.1205	1.6553	2.4358
4.b	0.4776	0.7169	0.9622
4.c	0.0307	-0.0609	-0.1940

Table 10: Monetary Base: $R + L_d + L_p$

Case	$s = 1$	$s = 2$	$s = 3$
1	0.2832	4.2755	5.4551
2	0.2832	4.2755	5.4551
3.a	1.7622	3.0671	55.8468
3.b	3.1110	4.2958	57.6424
3.c	3.5792	1.4518	3.7653
4.a	1.5355	1.3602	4.7967
4.b	3.5792	4.4839	6.2421
4.c	0.4908	3.1061	10.1478

Table 11: Variance of the sample Base: $\widehat{var}(R + L_d + L_p)$

Case	$s = 1$	$s = 2$	$s = 3$
1	0.0104	0.0104	0.0104
2	0.0104	0.0104	0.0104
3.a	1.0000	1.0000	1.0000
3.b	0.4117	0.4903	0.5403
3.c	0.0001	0.0415	0.1309
4.a	1.0000	1.0000	1.0000
4.b	0.0619	0.0878	0.1167
4.c	0.0000	0.0000	0.0000

Table 12: Probability of default: Π

Case	$s = 1$	$s = 2$	$s = 3$
1	0.0013	0.0013	0.0013
2	0.0013	0.0013	0.0013
3.a	0.0000	0.0000	0.0000
3.b	0.1641	0.1856	0.1857
3.c	0.0000	0.0359	0.0955
4.a	0.0000	0.0000	0.0000
4.b	0.0148	0.0317	0.0590
4.c	0.0000	0.0000	0.0000

Table 13: Sample variance of the probability of default: $\widehat{var}(\Pi)$

B Code for the S-Function block: adjusted expectations

```
function [sys,x0,str,ts] =adjusted_expectations(t,x,u,flag)
switch flag,
case 0
;[sys,x0,str,ts] =mdlInitializeSizes;
case 3
sys=mdlOutputs(t,x,u);
case { 1, 2, 4, 9 }
sys=[];
otherwise
error(['Unhandled flag = ',num2str(flag)]);
end
function [sys,x0,str,ts] = mdlInitializeSizes()
sizes = simsizes;
sizes.NumContStates = 0;
sizes.NumDiscStates = 0;
sizes.NumOutputs = 2;
sizes.NumInputs = 6;
sizes.DirFeedthrough = 1;
sizes.NumSampleTimes = 1;
sys = simsizes(sizes);
str = [];
x0 = [];
ts = [-1 0];
function sys = mdlOutputs(t,x,u)
syms r W
f=(r/u(3)).*(1/(u(6).*u(4).*sqrt(2.*pi))).
*exp((-1/(2.*(u(6).*u(4)).^ 2)).*(r-u(1)).^ 2);
W=u(3);
g=int(f,-Inf,W);
k=eval(g);
h=u(5)*(1/(u(6).*u(4).*sqrt(2.*pi))).
*exp((-1/(2.*(u(6).*u(4)).^ 2)).*(r-u(1)).^ 2);
m=int(h,W,Inf);
n=eval(m);
```

```
p=n+k;
q=((p-u(5))/u(5));
sys =[p,q];
```

C Code for the S-Function block: adjusted expectations

```
function [sys,x0,str,ts] =default_probability(t,x,u,flag)
case 0
;[sys,x0,str,ts]=mdlInitializeSizes;
case 3
sys=mdlOutputs(t,x,u);
case { 1, 2, 4, 9 }
sys=[];
otherwise
error(['Unhandled flag = ',num2str(flag)]);
end
function [sys,x0,str,ts] = mdlInitializeSizes()
sizes = simsizes;
sizes.NumContStates = 0;
sizes.NumDiscStates = 0;
sizes.NumOutputs = 1;
sizes.NumInputs = 3;
sizes.DirFeedthrough = 1;
sizes.NumSampleTimes = 1;
sys = simsizes(sizes);
str = [];
x0 = [];
ts = [-1 0];
function sys = mdlOutputs(t,x,u)
syms c f=(1/(u(2).*sqrt(2.*pi))).
*exp((-1/(2.*u(2).^2)).*(c-u(1)).^2);
g=int(f,-Inf,u(3));
k=eval(g);
sys =k;
```