| Catalog Number | |
|---|---|
| Notes | Type |

**Compact Fluorescent Downlights**

# 8" AF

## Lensed

Horizontal Lamp
Twin-Tube, Double Twin-Tube

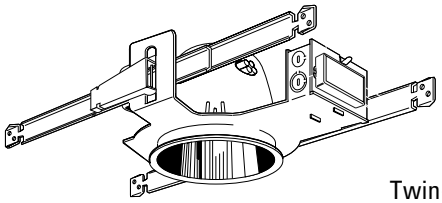

## FEATURES

OPTICAL SYSTEM

- Reflector - Self-flanged, specular clear, highly specular or semi-diffuse reflector.
- Baffle/cone - Specular clear upper reflector. Microgroove baffle with white painted flange or specular black cone with flange that matches cone finish.
- Brightness control and high efficiency are optimally balanced.
- Controlled anodized coating suppresses iridescence.
- Lens - Six different lens types available (see Lens Type).

HOUSING

- 16-gauge galvanized steel mounting/plaster frame with friction support springs to retain optical system. Maximum 7/8" ceiling thickness.
- Expandable, self-locking mounting bars provide horizontal and vertical adjustment.
- Galvanized steel junction box with bottom-hinged access covers and spring latches. Two combination 1/2"–3/4" and four 1/2" knockouts for straight-through conduit runs. Capacity: 8 (4 in, 4 out) No. 12 AWG conductors, rated for 75°C.

ELECTRICAL SYSTEM

- Die-cast aluminum socket housing. Ventilated top for convective cooling.
- Horizontally-mounted, positive-latch, thermoplastic socket(s) in single (centered) or double-lamp configuration.
- Class P (thermally protected) high power factor ballast(s) mounted to the junction box.

LISTING

- Fixtures are UL listed for thru-branch wiring, recessed mounting and damp locations. Listed and labeled to comply with Canadian Standards (see Options).

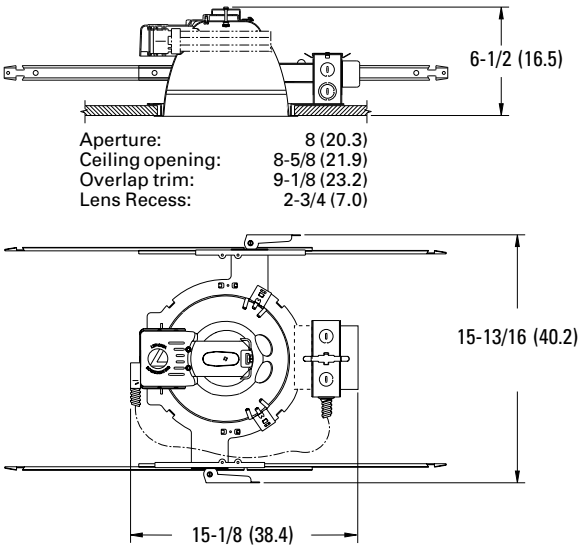


| | |
|---|---|
| Aperture: | 8 (20.3) |
| Ceiling opening: | 8-5/8 (21.9) |
| Overlap trim: | 9-1/8 (23.2) |
| Lens Recess: | 2-3/4 (7.0) |

All dimensions are inches (centimeters).
Maximum dimension for two ballast configuration. Actual configuration may vary.

## ENERGY

| LER.DOL | Annual Energy Cost | Lamps | Lamp Lumens | Ballast Factor | Input Watts |
|---|---|---|---|---|---|
| 38 | $6.32 | 2/26DTT | 3600 | .98 | 52 |

Calculated in accordance with NEMA standard LE-5.

## ORDERING INFORMATION

Example: **AF 2/26DTT 8AR CGL 120 GEB10 WLP**

Choose the boldface catalog nomenclature that best suits your needs and write it on the appropriate line.
Order accessories as separate catalog numbers (shipped separately).

**AF**

### Series

**AF**

### Wattage/Lamp

**1/9TT**[1] One 9W twin-tube
**2/9TT**[1] Two 9W twin-tube
**1/13TT**[1] One 13W twin-tube
**2/13TT**[1] Two 13W twin-tube
**1/13DTT**[2] One 13W double twin-tube
**2/13DTT**[2] Two 13W double twin-tube
**1/18DTT**[2] One 18W double twin-tube
**2/18DTT**[2] Two 18W double twin-tube
**1/26DTT**[2] One 26W double twin-tube
**2/26DTT**[2] Two 26W double twin-tube

### Reflector Type

**8AR** Clear
**8PR** Pewter
**8UBR** Umber
**8WTR** Wheat
**8CR**[3] Champagne Gold
**8GR**[3] Gold
**8BC**[4] Black Cone
**8MB**[4] Black Microgroove Baffle

### Finish

**(blank)** Specular low iridescent
**LD** Semi-diffuse low iridescent
**LS** Highly specular

### Lens Type

**CGL** Clear Glass Lens
**T73** Tempered Prismatic Lens
**A12** Prismatic Acrylic Lens
**PPC** Prismatic Polycarbonate Lens
**PCL** Clear Polycarbonate Lens
**CAL** Clear Acrylic Lens

### Voltage

**120**
**277**
**347**

### Ballast[5]

**EMB** Electromagnetic ballast. Requires two-pin lamp.
**GEB10** Electronic ballast. Requires four-pin lamp.
**DMHL** Lutron Hi-lume® electronic dimming ballast. (120V or 277V; 18DTT, 26DTT, 32TRT and 42TRT only.) Requires four-pin lamp. Minimum dimming level 5%.
**ADEZ** Advance Mark X electronic dimming ballast. (120V or 277V; 26DTT, 26TRT, 32TRT and 42TRT only.) Requires four-pin lamp. Minimum dimming level 5%.

### Options

**WLP** With 35K lamp (shipped separately).
**TRW** White painted flange. (Standard with 8MB.)
**LRC**[6] Provides compatibility with Lithonia Reloc System. Lithonia Reloc System can be installed **less this option** with connectors provided by others. Access above ceiling required.
**GMF** Single slow-blow fuse.
**RIF** Radio interference filter.
**ELR**[7] Emergency battery pack. Remote test switch provided.
**EL**[7,8] Emergency battery pack. Integral test switch provided.
**QDS**[9] Quick disconnect for easy ballast replacement.
**DS** Dual switching.
**GSKT** 1/8" x 3/8" foam gasketing.
**CSA** Listed and labeled to comply with Canadian Standards.

### *Accessories*

Order as separate catalog number.

**SC8** Sloped ceiling adaptor. Degree of slope must be specified (10D, 15D, 20D, 25D, 30D). Ex: SC8 **10D**.
**CTA8** Ceiling thickness adaptor. (Extends mounting frame to accommodate ceiling thickness up to 2".)

NOTES
1 Available with electromagnetic ballast only.
2 Available with electromagnetic or electronic ballast.
3 Not recommended for use with compact fluorescent lamps; consult factory.
4 Not available with finishes.
5 Refer to options and accessories tab for additional ballast types.
6 For compatible Reloc systems, refer to options and accessories tab.
7 For dimensional changes, refer to options and accessories tab.
8 Available in two-lamp units only.
9 Not available with ELR or EL option.

# 8" **AF** Lensed

| Distribution curve | Distribution data | Output data | Coefficient of utilization | Illuminance Data at 30" Above Floor for a Single Luminaire |
|---|---|---|---|---|

**AF 2/26DTT 8AR CGL,** (2) PL-C 26W/27K lamp, 3600 total rated lumens, 1.4 s/mh, test no. LTL7927

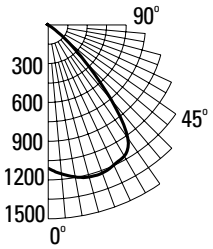


| From 0° | cp. | Lumens |
|---|---|---|
| 0° | 1110 | 0 |
| 5° | 1157 | 112 |
| 15° | 1219 | 343 |
| 25° | 1196 | 547 |
| 35° | 1069 | 654 |
| 45° | 401 | 329 |
| 55° | 16 | 27 |
| 65° | 1 | 1 |
| 75° | 0 | 0 |
| 85° | 0 | 0 |
| 90° | 0 | 0 |

| Zone | Lumens | %lamp |
|---|---|---|
| 0°-30° | 1002 | 27.8 |
| 0°-40° | 1656 | 46.0 |
| 0°-60° | 2012 | 55.9 |
| 0°-90° | 2013 | 55.9 |
| 90°-180° | 0 | 0.0 |
| 0°-180° | 2013 | 55.9* |

*Efficiency

| ρf / ρc / ρw | 80% 50% | 80% 30% | 20% 70% 50% | 20% 70% 30% | 50% 50% | 50% 30% |
|---|---|---|---|---|---|---|
| 1 | 61 | 60 | 60 | 59 | 58 | 57 |
| 2 | 56 | 54 | 55 | 53 | 54 | 52 |
| 3 | 52 | 49 | 51 | 48 | 49 | 47 |
| 4 | 48 | 44 | 47 | 44 | 46 | 43 |
| 5 | 44 | 40 | 43 | 40 | 42 | 39 |
| 6 | 40 | 37 | 40 | 36 | 39 | 36 |
| 7 | 37 | 33 | 37 | 33 | 36 | 33 |
| 8 | 35 | 31 | 34 | 31 | 34 | 30 |
| 9 | 32 | 28 | 32 | 28 | 31 | 28 |
| 10 | 30 | 26 | 30 | 26 | 29 | 26 |

| Mount height | Initial fc at beam center | 50% beam angle 72.1° Beam diameter | 50% beam angle 72.1° fc at beam edge | 10% beam angle 91.8° Beam diameter | 10% beam angle 91.8° fc at beam edge |
|---|---|---|---|---|---|
| 8' | 36.7 | 8.0' | 18.3 | 11.4' | 3.7 |
| 10' | 19.7 | 10.9' | 9.9 | 15.5' | 2.0 |
| 12' | 12.3 | 13.8' | 6.1 | 19.6' | 1.2 |
| 14' | 8.4 | 16.7' | 4.2 | 23.7' | 0.8 |
| 16' | 6.1 | 19.6' | 3.0 | 27.9' | 0.6 |

**AF 2/26DTT 8MB CGL,** (2) PL-C 26W/27K lamp, 3600 total rated lumens, 1.1 s/mh, test no. LTL8037

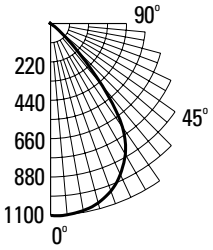


| From 0° | cp. | Lumens |
|---|---|---|
| 0° | 1100 | 0 |
| 5° | 1101 | 105 |
| 15° | 1065 | 300 |
| 25° | 955 | 435 |
| 35° | 726 | 435 |
| 45° | 210 | 174 |
| 55° | 7 | 14 |
| 65° | 0 | 0 |
| 75° | 0 | 0 |
| 85° | 0 | 0 |
| 90° | 0 | 0 |

| Zone | Lumens | %lamp |
|---|---|---|
| 0°-30° | 840 | 23.3 |
| 0°-40° | 1275 | 35.4 |
| 0°-60° | 1464 | 40.7 |
| 0°-90° | 1464 | 40.7 |
| 90°-180° | 0 | 0.0 |
| 0°-180° | 1464 | 40.7* |

*Efficiency

| ρf / ρc / ρw | 80% 50% | 80% 30% | 20% 70% 50% | 20% 70% 30% | 50% 50% | 50% 30% |
|---|---|---|---|---|---|---|
| 1 | 45 | 44 | 44 | 43 | 42 | 41 |
| 2 | 41 | 40 | 41 | 39 | 39 | 38 |
| 3 | 38 | 36 | 38 | 36 | 37 | 35 |
| 4 | 35 | 33 | 35 | 33 | 34 | 32 |
| 5 | 33 | 30 | 32 | 30 | 32 | 29 |
| 6 | 30 | 28 | 30 | 28 | 29 | 27 |
| 7 | 28 | 26 | 28 | 25 | 27 | 25 |
| 8 | 26 | 24 | 26 | 24 | 26 | 23 |
| 9 | 25 | 22 | 24 | 22 | 24 | 22 |
| 10 | 23 | 20 | 23 | 20 | 23 | 20 |

| Mount height | Initial fc at beam center | 50% beam angle 60.4° Beam diameter | 50% beam angle 60.4° fc at beam edge | 10% beam angle 86.7° Beam diameter | 10% beam angle 86.7° fc at beam edge |
|---|---|---|---|---|---|
| 8' | 36.4 | 6.4' | 18.2 | 10.4' | 3.6 |
| 10' | 19.6 | 8.7' | 9.8 | 14.1' | 2.0 |
| 12' | 12.2 | 11.1' | 6.1 | 17.9' | 1.2 |
| 14' | 8.3 | 13.4' | 4.2 | 21.7' | 0.8 |
| 16' | 6.0 | 15.7' | 3.0 | 25.4' | 0.6 |

**AF 2/26DTT 8BC CGL,** (2) PL-C 26W/27K lamp, 3600 total rated lumens, 1.1 s/mh, test no. LTL8036

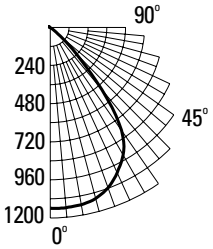


| From 0° | cp. | Lumens |
|---|---|---|
| 0° | 1138 | 0 |
| 5° | 1139 | 109 |
| 15° | 1115 | 313 |
| 25° | 1009 | 461 |
| 35° | 791 | 472 |
| 45° | 232 | 190 |
| 55° | 5 | 12 |
| 65° | 0 | 0 |
| 75° | 0 | 0 |
| 85° | 0 | 0 |
| 90° | 0 | 0 |

| Zone | Lumens | %lamp |
|---|---|---|
| 0°-30° | 883 | 24.5 |
| 0°-40° | 1354 | 37.6 |
| 0°-60° | 1556 | 43.2 |
| 0°-90° | 1556 | 43.2 |
| 90°-180° | 0 | 0.0 |
| 0°-180° | 1556 | 43.2* |

*Efficiency

| ρf / ρc / ρw | 80% 50% | 80% 30% | 20% 70% 50% | 20% 70% 30% | 50% 50% | 50% 30% |
|---|---|---|---|---|---|---|
| 1 | 48 | 46 | 47 | 46 | 45 | 44 |
| 2 | 44 | 42 | 43 | 41 | 42 | 40 |
| 3 | 41 | 38 | 40 | 38 | 39 | 37 |
| 4 | 38 | 35 | 37 | 35 | 36 | 34 |
| 5 | 35 | 32 | 34 | 32 | 34 | 31 |
| 6 | 32 | 29 | 32 | 29 | 31 | 29 |
| 7 | 30 | 27 | 30 | 27 | 29 | 27 |
| 8 | 28 | 25 | 28 | 25 | 27 | 25 |
| 9 | 26 | 23 | 26 | 23 | 25 | 23 |
| 10 | 24 | 22 | 24 | 22 | 24 | 21 |

| Mount height | Initial fc at beam center | 50% beam angle 61.3° Beam diameter | 50% beam angle 61.3° fc at beam edge | 10% beam angle 87.3° Beam diameter | 10% beam angle 87.3° fc at beam edge |
|---|---|---|---|---|---|
| 8' | 37.6 | 6.5' | 18.8 | 10.5' | 3.8 |
| 10' | 20.2 | 8.9' | 10.1 | 14.3' | 2.0 |
| 12' | 12.6 | 11.3' | 6.3 | 18.1' | 1.3 |
| 14' | 8.6 | 13.6' | 4.3 | 21.9' | 0.9 |
| 16' | 6.2 | 16.0' | 3.1 | 25.7' | 0.6 |

NOTES:
1. For electrical characteristics consult technical data tab.
2. Tested to current IES and NEMA standards under stabilized laboratory conditions. Various operating factors can cause differences between laboratory data and actual field measurements. Dimensions and specifications are based on the most current available data and are subject to change without notice.



©2000 Lithonia Lighting Rev. 5/02



LITHONIA LIGHTING
DOWNLIGHTING & TRACK LIGHTING
ONE LITHONIA WAY, CONYERS, GEORGIA 30012, TELEPHONE 770-922-9000, FAX 770-860-3129
www.lithonia.com • IN CANADA: 1100 50TH AVE., LACHINE, QUEBEC H8T 2V3